FYRQ-01 5GL Thread-On Spill Container

AILE Spill containment Manhole is designed to prevent spilled product from entering the soil near the fill and vapor return riser connections on underground storage tanks during normal tank filling operation, or in the event of tank overfill. The spill containment catches spillage to help prevent soil contamination and ground water pollution. AILE Thread-On Spill Containment Manhole is generally used on new tank or riser pipe installations.

Materials:

Cover: Cast Iron/Aluminum
Mounting ring: Cast Iron
Bellows: Polyethylene
Base: Compound Fibre
Clamps: Stainless Steel
Seals: Buna-N

Package:

Net Weight: 25.35kg/pc
Gross Weight: 28kg/pc
42x42x48cm^3/case of 1pc

Ordering Specifications:

Product#	Connection Threads	Material of Cover
FYRQ-01-801	NPT4"	Cast Iron
FYRQ-01-802	NPT4"	Aluminum
FYRQ-01-803	BSPT4"	Cast Iron
FYRQ-01-804	BSPT4"	Aluminum

Features & Benefits:

- **Easy installation** - Reduces job-site time and installation costs. Thread-On Spill Containment screw directly onto 4" NPT or BSP risers. No external connections to make; adjust the final grade height and support the unit with backfill.
- **Integral Pull-to-Open Drain Valve** - Allows high-speed drainage of excess product into the tank. Designed with a conventional self-cleaning seal and removable screen for easier component cleaning.
- **Capacity** - Available in a true 5 gallon capacity.
- **Rain-Shedding Cover** - Available in cast iron, this unique design incorporates a seal in the underside of the cover. The seal seats between 2 dams on the mounting ring to prevent surface water from entering the spill container.
- **Fuel Compatibility** - Designed to accommodate the fuels of the future, including methanol, ethanol and fuels with MTBE additives.
- **Heavy-Duty Mounting Ring** - The angled ramp design offers superior protection against snow and conductive. A rugged optional cast iron base is also available.

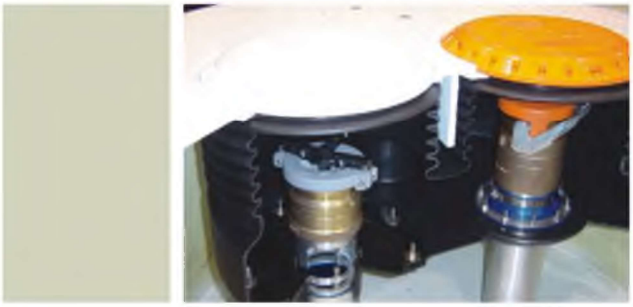

AILE® FYRQ-01

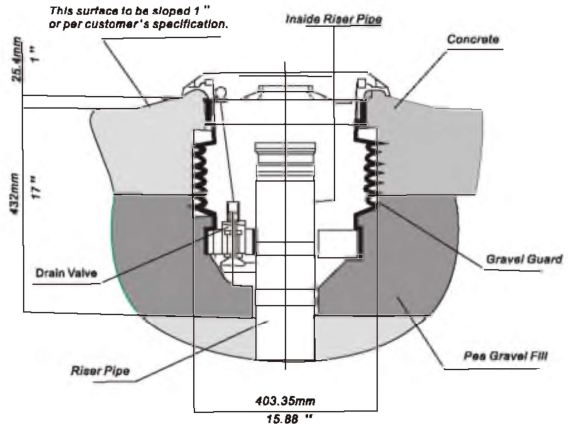

Installation Instruction

